GALVAPLY ROOF SYSTEM

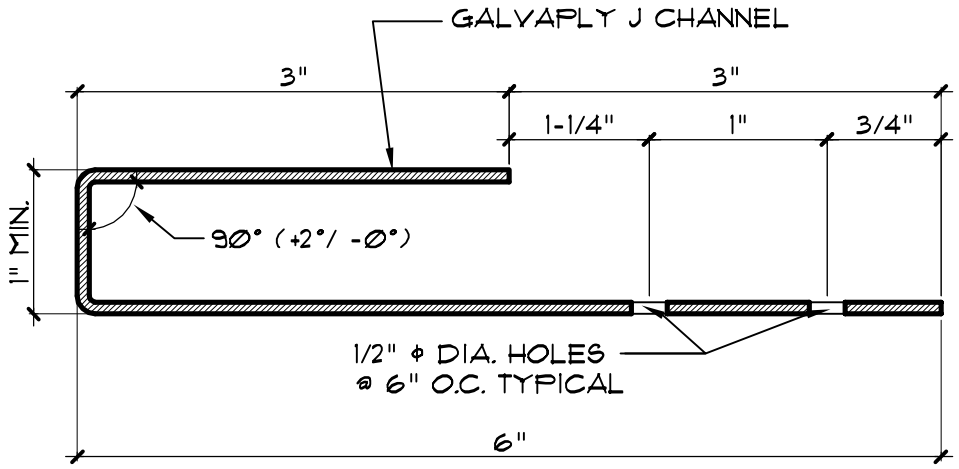

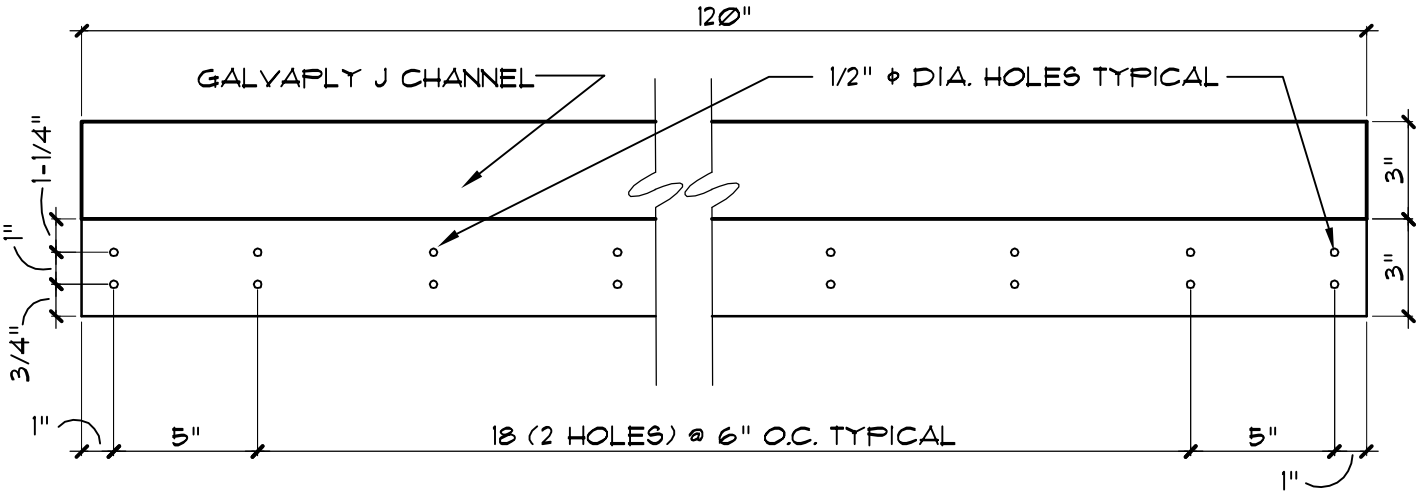

CREGO METAL SYSTEMS, INC.

Manufactured by Crego Metal Systems Inc.

P.O Box 10700
Albuquerque, N.M. 87185
505-897-0214
www.cregometal.com

This drawing and the specifications contained herein are confidential and propietary. They are property the of Crego Metal Systems, Inc. and shall not be reproduced, copied or used in whole or in part for any purpose without written permission. This is an unpublished work protected under the federal copyright laws.

GALVAPLY J CHANNEL

FILENAME:	DATE:	SCALE:	EDITION:	SHEET:
GPLY-0012	6/9/10	NTS	0	1/1